Proxitron

SENSORS MADE IN GERMANY

Can sensors

for manufacturing and filling cans

01 Can **line** sensor

Can detection on conveying sections

02 Can **counting** sensor

A sensor for all cans

03 Area can **mass** sensor

Sensor for area and mass control

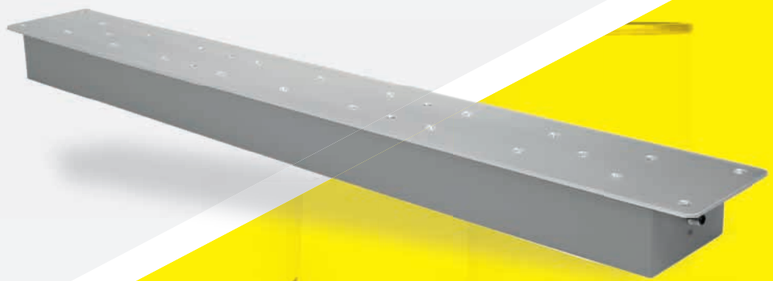

The classic can

Versatile, sturdy and practical

In many ways, the can is something special. It is used as commercial packaging for all types of foodstuffs, is tied behind the cars of newly-married to bring luck or used by children as a tin-can telephone.

Cans are easy and practical, as there is always a can opener close at hand. As a sensor manufacturer with over 35 years of experience in the development and production of sensors, we have set ourselves the goal of developing high-performance and cost-optimised sensors for the manufacturing and filling processes for cans. These special sensors are used throughout the world by countless manufacturers of metal packaging for the foodstuffs and drinks industry as well as for non-food products such as paint, hairspray or batteries.

Our first can line sensor to use the inductive principle was created at the Elmshorn site more than two decades ago to control the speed and feed of cans in a production line. With the passage of time Proxitron developed the first can line sensor with Teach-In function, which automatically adjusts to the surrounding conditions. „Teach-In and forget“ has been the motto ever since. See for yourself the powerful functions of our products and our accessories for the adaptation of Proxitron products in the manufacturing process for all types of two-part and three-part cans.

01 Can **line** sensor

Can detection on conveying sections

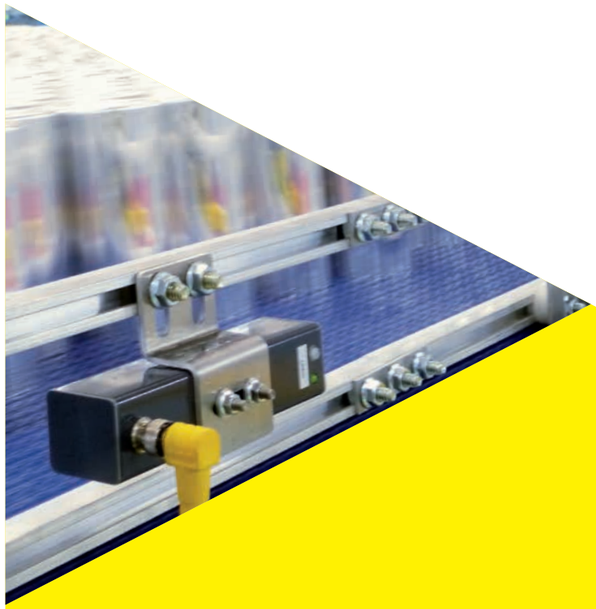

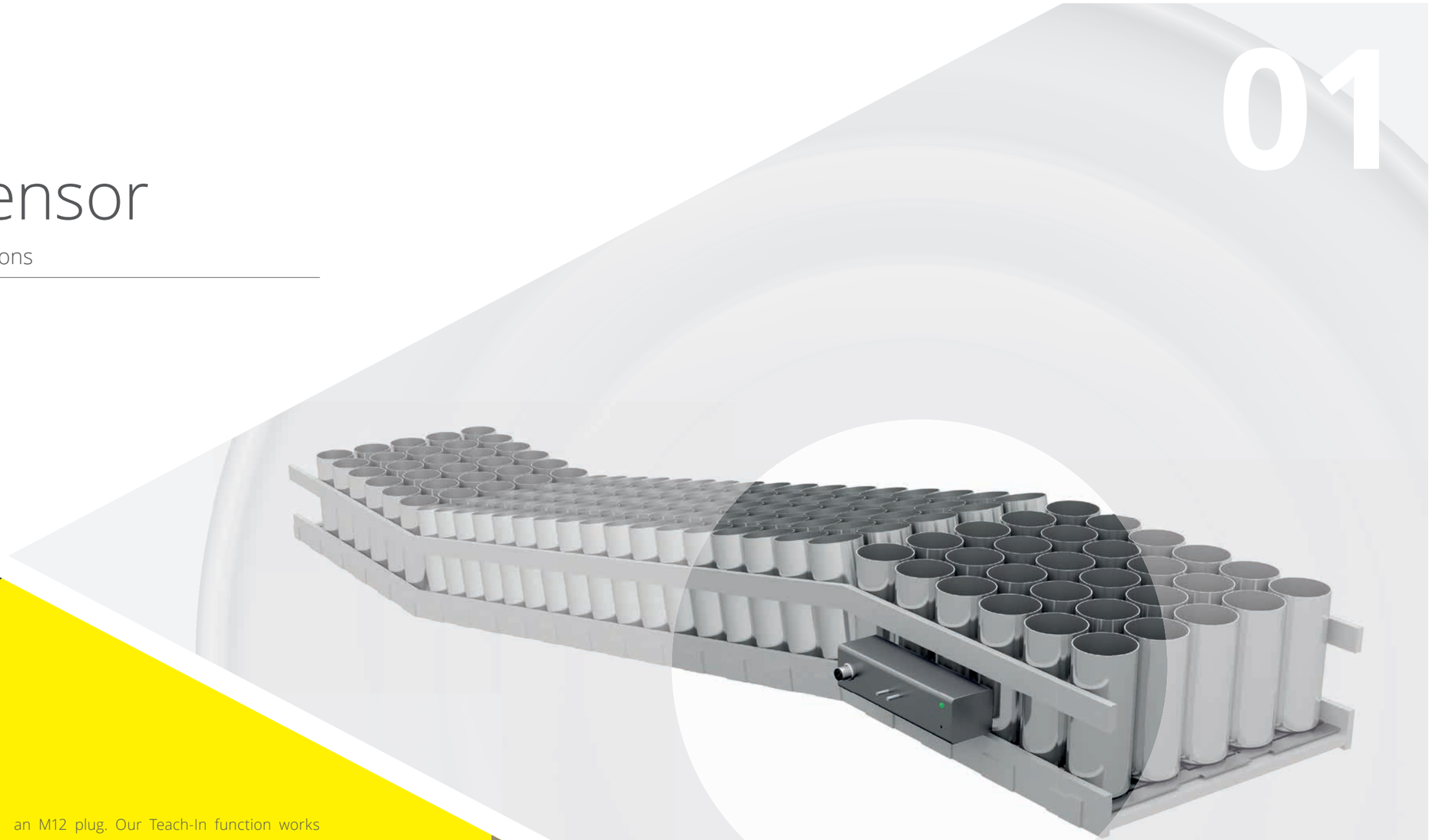

Our IKU type can line sensors are used throughout the conveyance sections for detecting aluminium or tin-plate cans. Thanks to the large sensor area, the detection of cans is possible throughout a large range of the conveyance section thus providing optimum feeding from the cup drawing press to the bodymaker, to the washer, feeder, drier, painting unit, printing and filling systems and the downstream logistics processes, all the way through to packaging. The devices are available in different lengths, have a standard switching distance of up to 30 mm and a robust plastic housing. They are connected via an M12 plug. Our Teach-In function works conveniently and reduces costs. A simple press of the button is enough and the sensor detects the installation conditions and adjusts itself ideally to any environment and any task. Fixed or adjustable mounting brackets, to optimise the fastening and alignment of the sensors to the conveyance sections, complete the product range.

To the application report
"Can line sensor"

02 Can **counting** sensor

A sensor for all cans

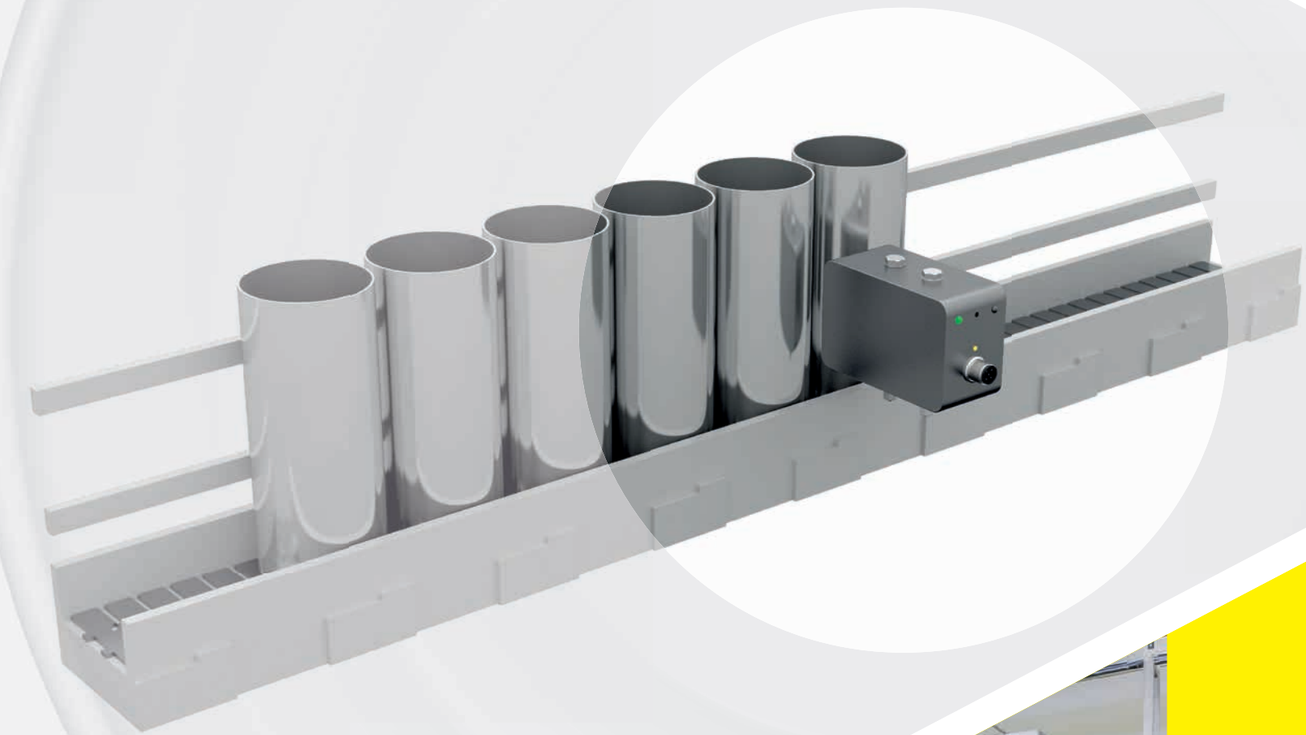

The counting of cans in the process is accompanied by other effects such as shaking, jiggling and in some cases also reverse movement or jumping of individual cans or multiple cans. An additional complication is the round shape of the cans. Our can count sensors have it all under control! The compact device counts cans made from aluminium or tin-plate, from 52 mm to 86 mm diameter – without remote station or double head.

It uses our clever Teach-In function and counts cans with a speed of up to 6000 units per minute – with absolute precision. Each can is counted just once – even if it passes the sensor again in reverse direction. The optional connection cable with angled coupling is available in different lengths and also as a shielded version.

To the application report
"Can count sensor"

03

03 Area can **mass** sensor

Sensor for area and mass control

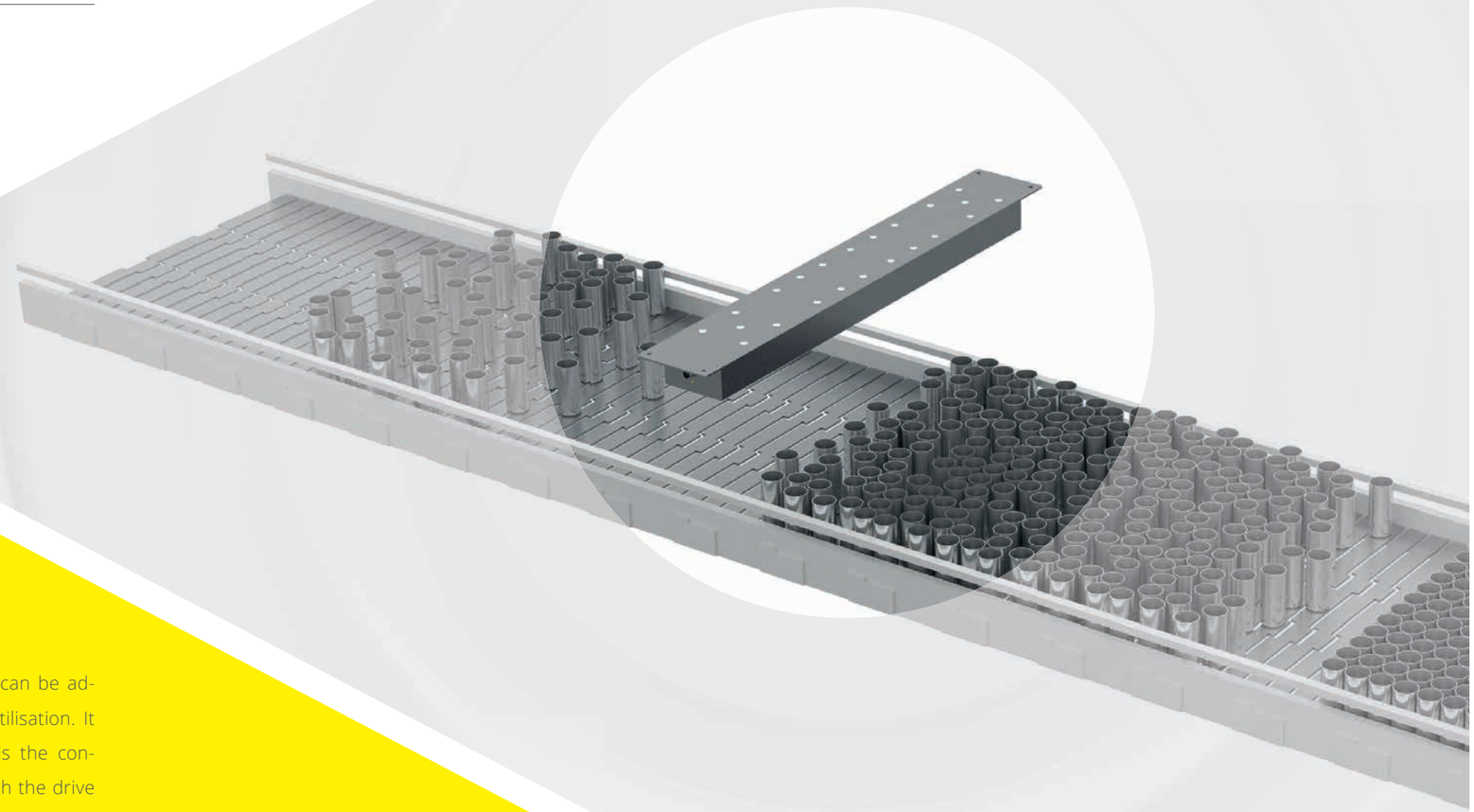

Our area can mass sensor assists you with the increasing efficiency of your can manufacturing system. High speeds in the manufacturing process necessitate the optimum quantity of cans or tins being provided at all times and all locations. The Proxitron sensor for area and mass control regulates the feed quantity and thus the can pressure. In doing so, neither the size of the can nor the material affect this. The area can mass sensor monitors the cup jam at the distributor, for example, and intelligently determines the percentage utilisation.

The integrated analogue output can be adjusted for different degrees of utilisation. It evaluates the signal and controls the conveyance speed in conjunction with the drive and thus prevents the pressure of cans being too high or increases the conveyance speed if there are too few cans. The optional connection cable with angled coupling is available in different lengths and also as a shielded version.

To the application report
"Area can mass sensor"

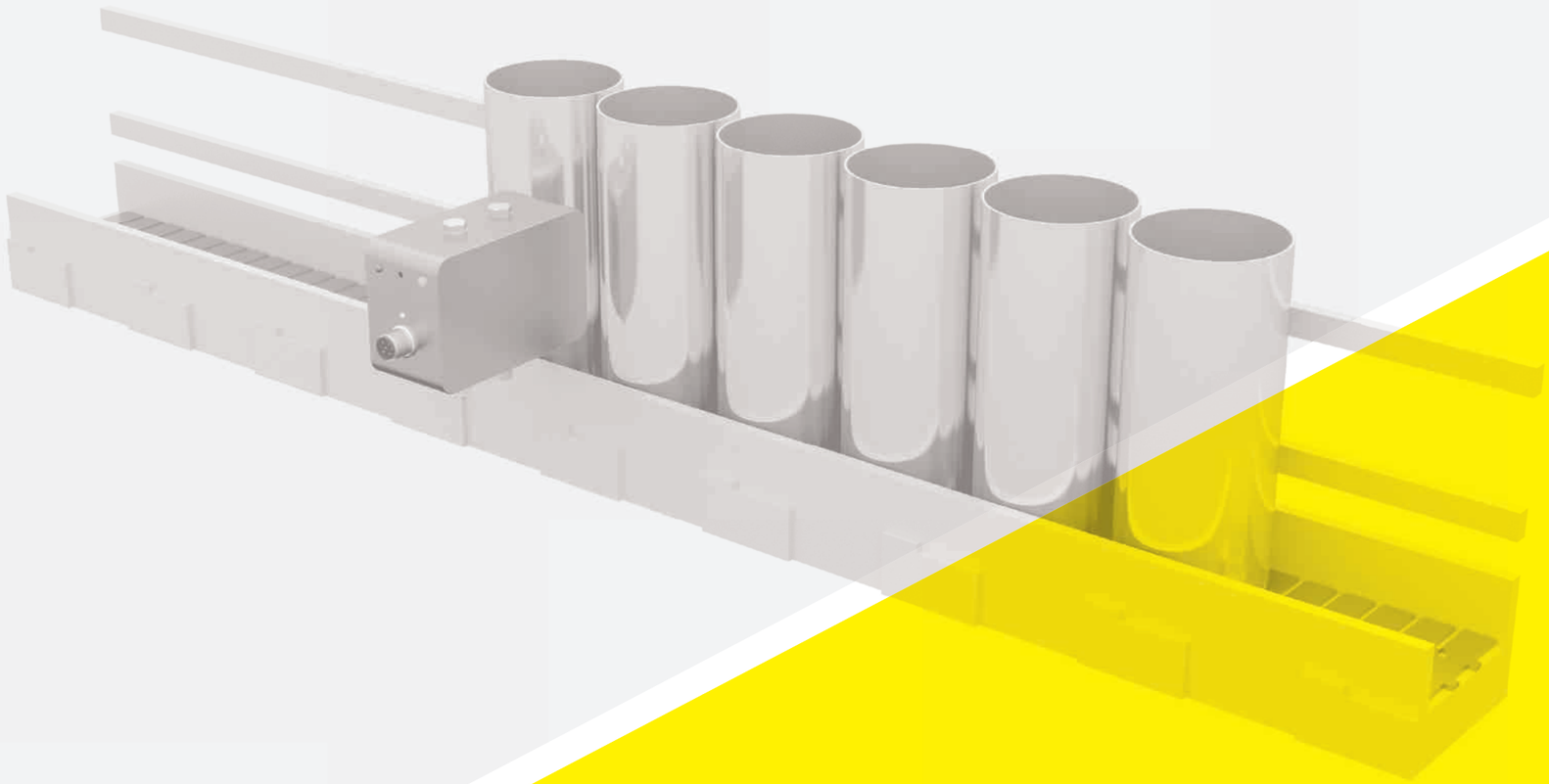

References

Ardagh Group
Ball Packaging
Crown Packaging
Heineken
Heinz Ketchup
Kraft Foods

Proxitron GmbH . Gärtnerstraße 10 . 25335 Elmshorn . Germany . phone: +49 4121 2621-0 . fax: +49 4121 2621-10
info@proxitron.de . www.proxitron.com

www.proxitron.com

Proxitron

SENSORS MADE IN GERMANY

P62e 0717